JORDAN CONCRETE LTD

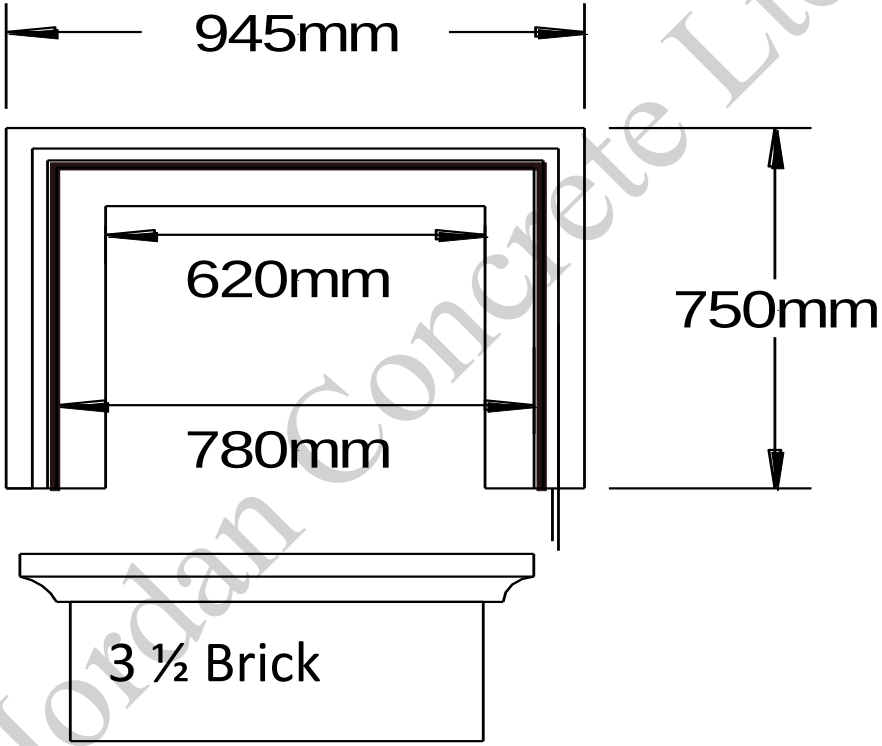

Jordan Concrete Ltd

Title: Product Code 842
Corbelled Chimney Cap

Date: 22.02.19