JORDAN
CONCRETE LTD

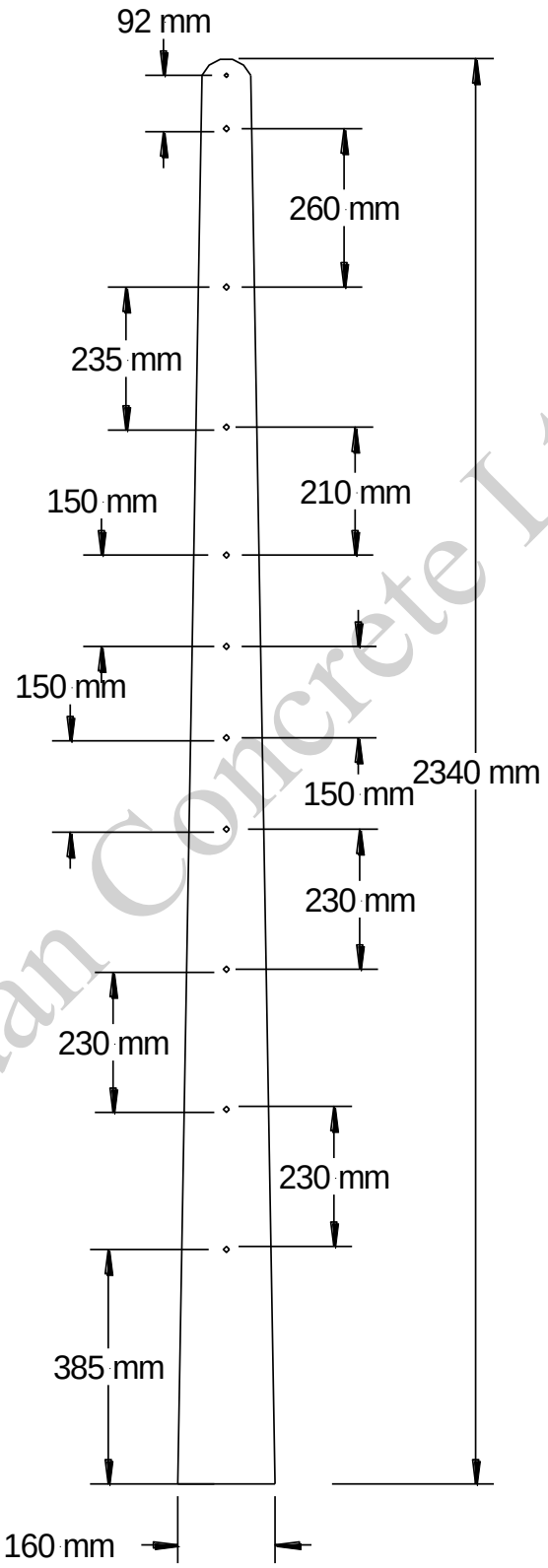

Jordan Concrete Ltd

Title: Product Code 713
160x160x2300mm

Date: 16.06.20